United States Patent [19]

Hollandsworth et al.

[11] **4,239,389**

[45] **Dec. 16, 1980**

[54] **VEHICLE WHEEL AND BODY ALIGNMENT DIAGNOSING SYSTEM**

[75] Inventors: **William J. Hollandsworth,** Town and Country; **Dean O. Grubbs,** Manchester, both of Mo.

[73] Assignee: **Hunter Engineering Company,** Bridgeton, Mo.

[21] Appl. No.: **967,072**

[22] Filed: **Dec. 6, 1978**

[51] **Int. Cl.**[3] **G01B 11/26**

[52] **U.S. Cl.** **356/155;** 33/288; 356/152

[58] **Field of Search** 356/152, 155; 33/203.18, 288

[56] **References Cited**

U.S. PATENT DOCUMENTS

2,601,262	6/1952	Carrigan	356/155
4,095,902	6/1978	Florer et al.	356/155
4,097,157	6/1978	Lill	356/155
4,126,943	11/1978	Senften	33/228

Primary Examiner—Richard A. Rosenberger

Attorney, Agent, or Firm—Gravely, Lieder & Woodruff

[57] **ABSTRACT**

A system for diagnosing the alignment characteristics of the wheels on a vehicle so that the planes of rotation of the wheels may be determined in relation to each other and with respect to the effect the wheels have on the attitude of the vehicle body while in motion. The system is made up of several instruments which develop signals which can be processed through electronic computation means capable of performing the necessary processing steps rapidly, with a high degree of accuracy and to a state in which the information can be displayed as soon as it is developed, stored for subsequent use, or transposed into a print-out.

20 Claims, 9 Drawing Figures

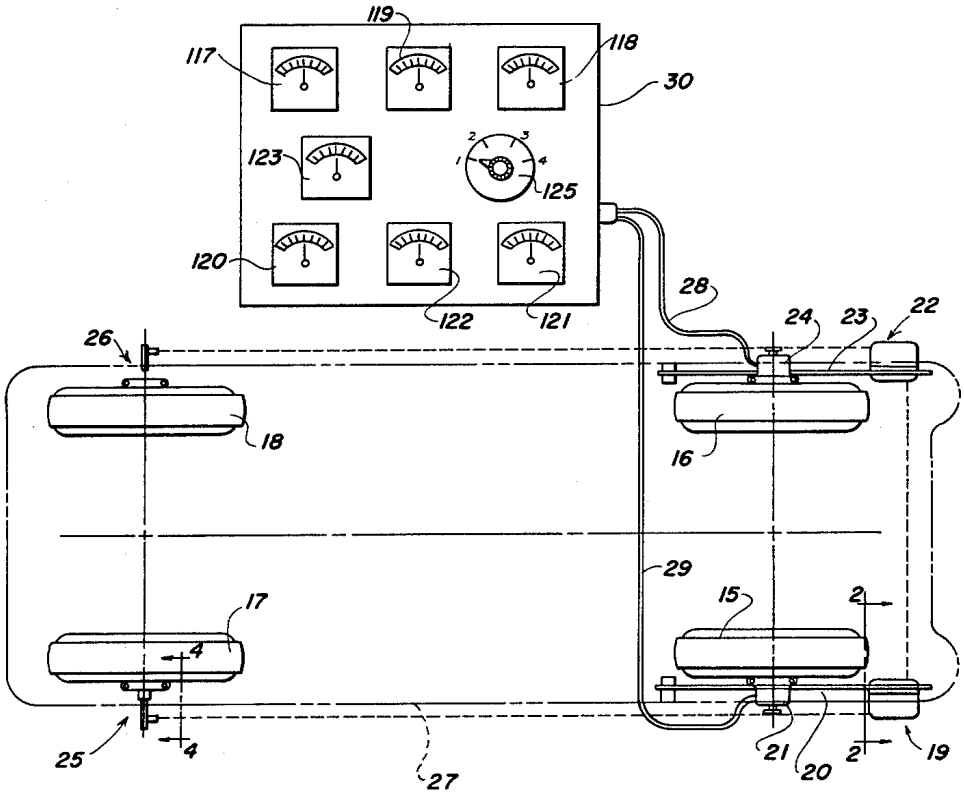

FIG. 1

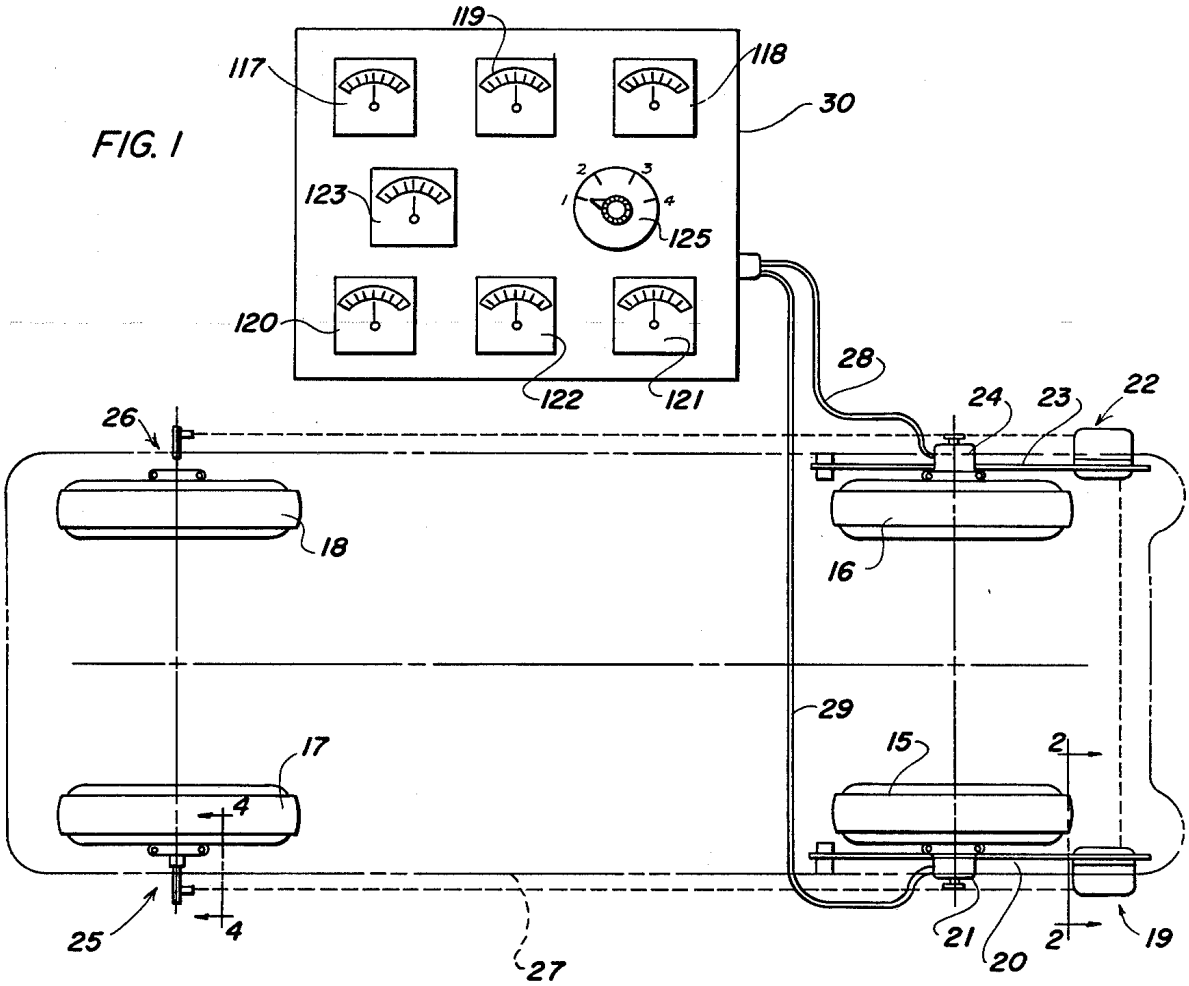

FIG. 2

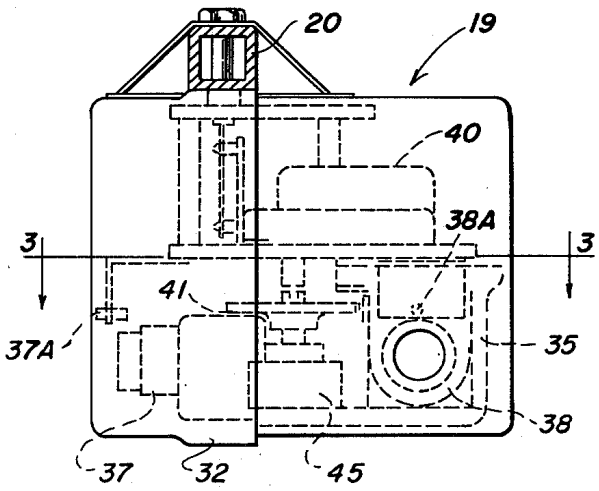

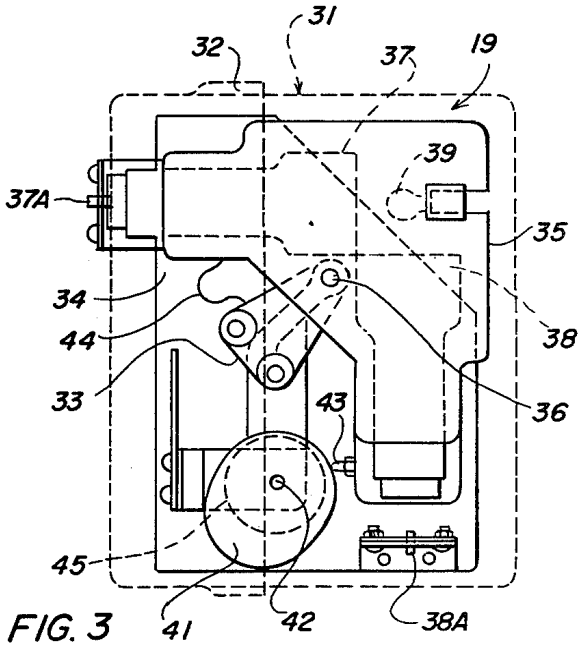

FIG. 3

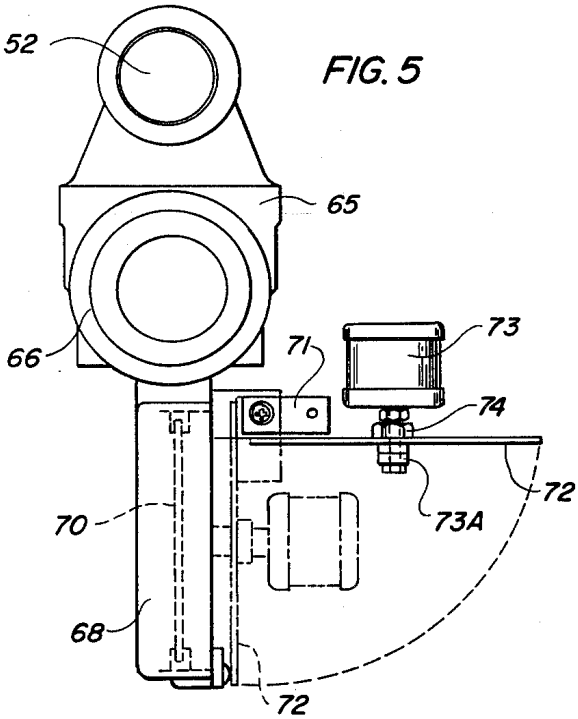

FIG. 5

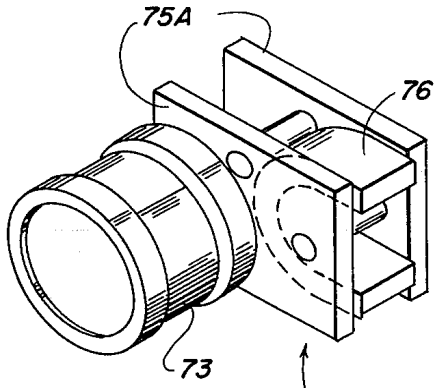

FIG. 6

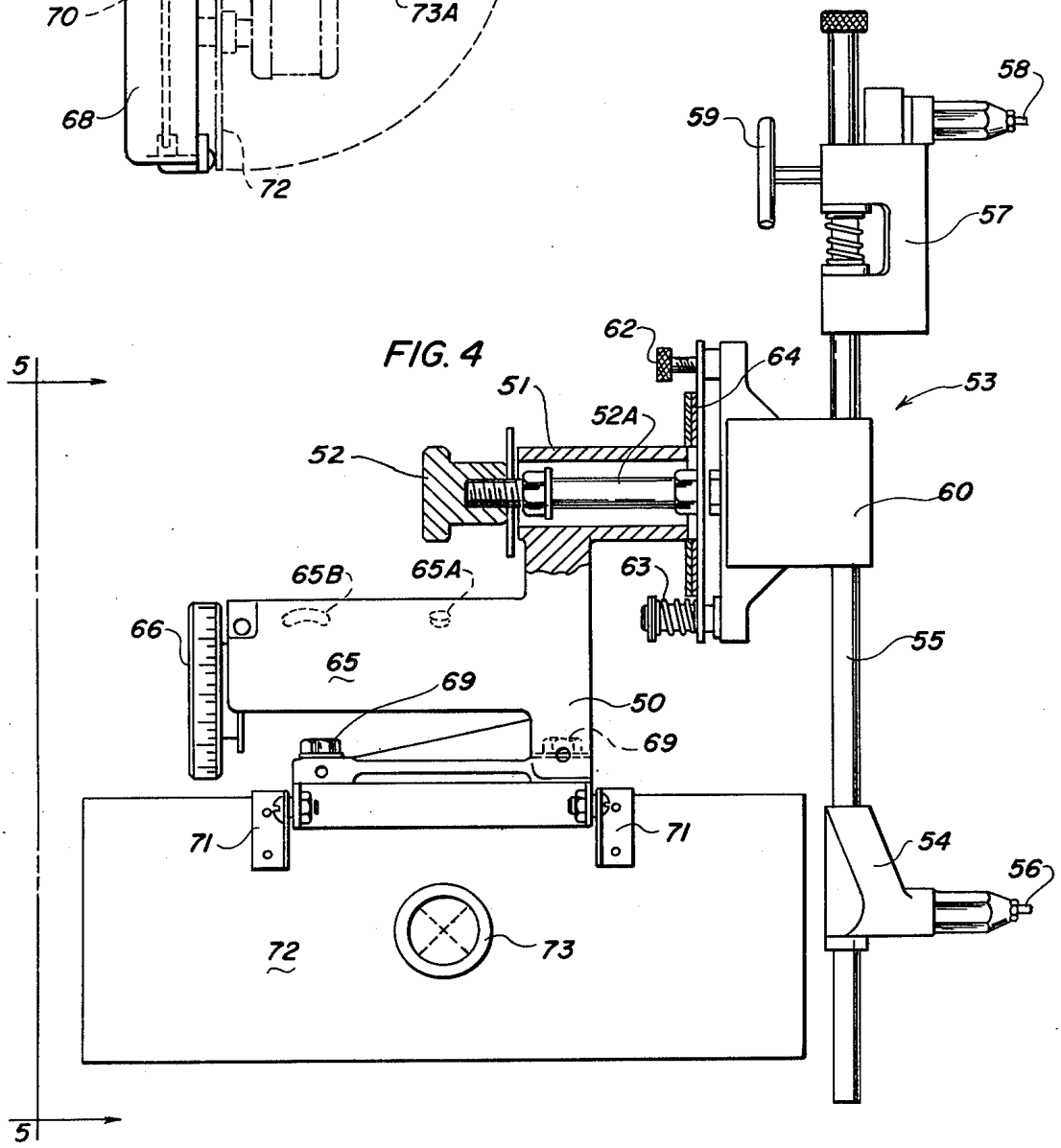

FIG. 4

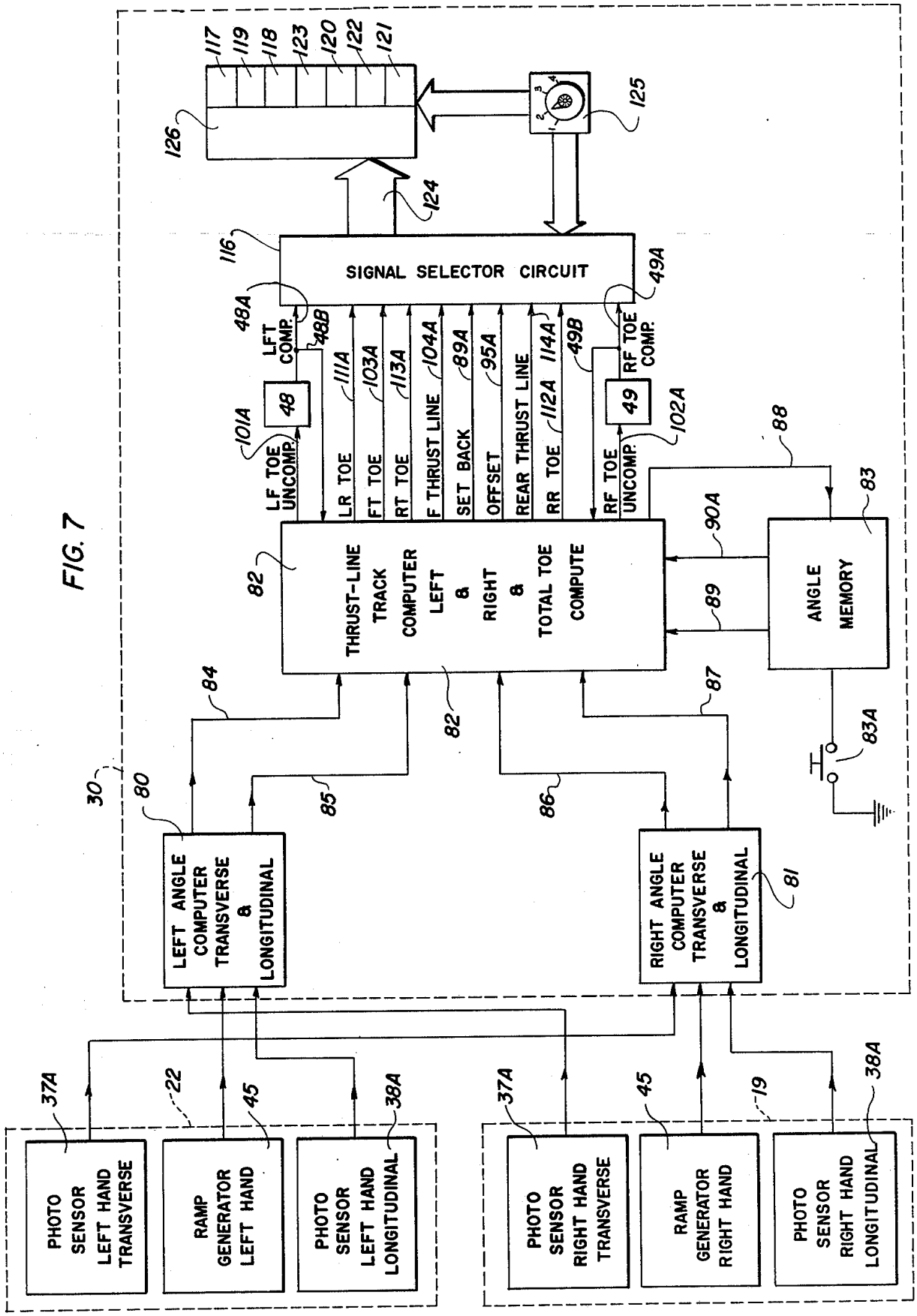
SIGNAL SELECTOR CIRCUIT
LFT COMP.
RF TOE COMP.
LF TOE UNCOMP.
RF TOE UNCOMP.
LR TOE
FT TOE
RT TOE
F THRUST LINE
SET BACK
OFFSET
REAR THRUST LINE
RR TOE
THRUST-LINE TRACK COMPUTER LEFT & RIGHT & TOTAL TOE COMPUTE
ANGLE MEMORY
LEFT ANGLE COMPUTER TRANSVERSE & LONGITUDINAL
RIGHT ANGLE COMPUTER TRANSVERSE & LONGITUDINAL
PHOTO SENSOR LEFT HAND TRANSVERSE
RAMP GENERATOR LEFT HAND
PHOTO SENSOR LEFT HAND LONGITUDINAL
PHOTO SENSOR RIGHT HAND TRANSVERSE
RAMP GENERATOR RIGHT HAND
PHOTO SENSOR RIGHT HAND LONGITUDINAL

FIG. 7

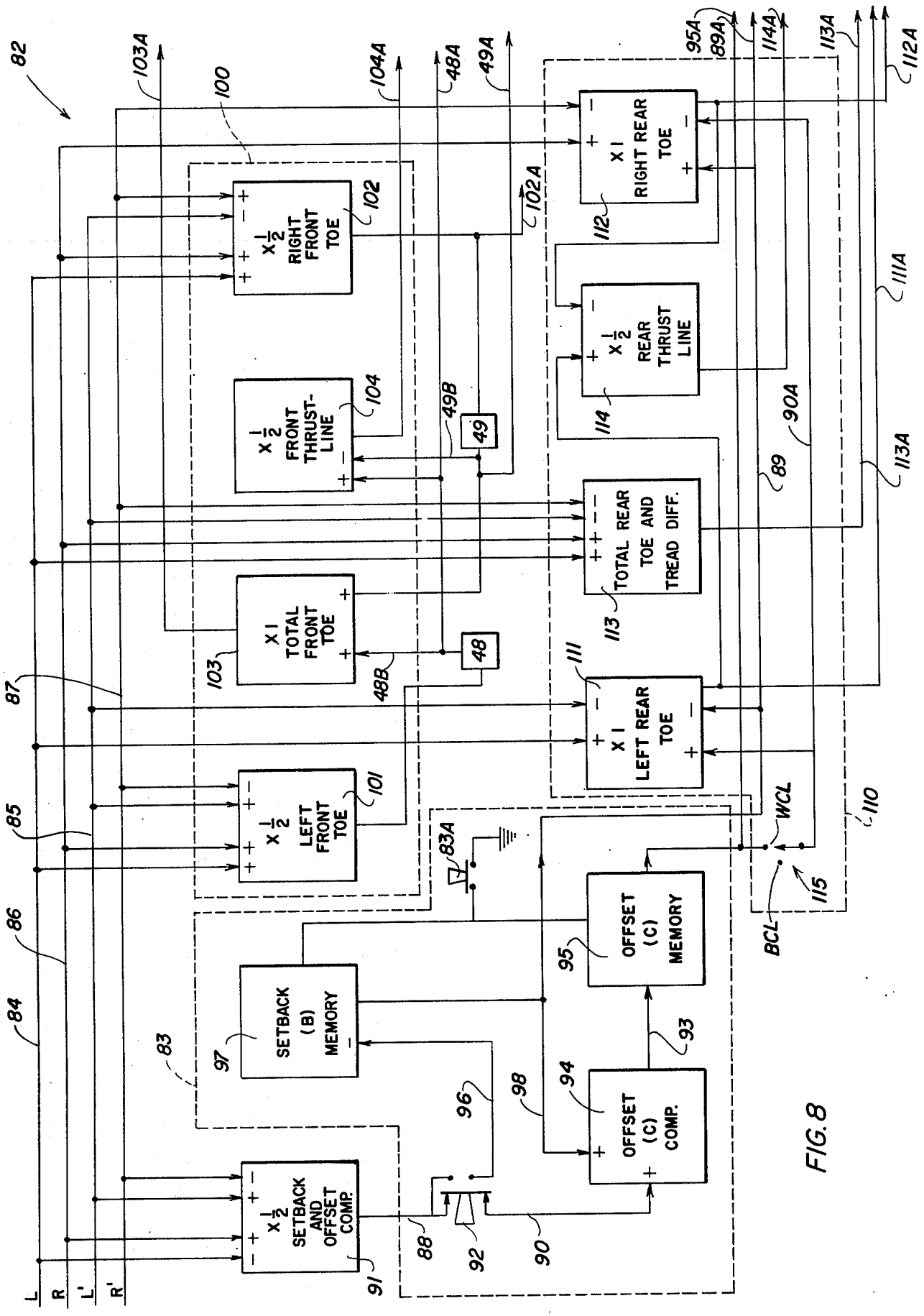
82
103A
100
104A
48A
49A
95A
89A
114A
113A
112A
X 1/2 RIGHT FRONT TOE
102
102A
X 1 RIGHT REAR TOE
112
X 1/2 REAR THRUST LINE
114
X 1/2 FRONT THRUST-LINE
104
49B
49
90A
89
113A
111A
TOTAL REAR TOE AND TREAD DIFF.
113
X 1 TOTAL FRONT TOE
103
48B
48
87
X 1 LEFT REAR TOE
111
X 1/2 LEFT FRONT TOE
101
85
83A
WCL
110
115
BCL
86
OFFSET (C) MEMORY
95
84
SETBACK (B) MEMORY
97
83
93
96
98
94
OFFSET (C) COMP.
X 1/2 SETBACK AND OFFSET COMP.
91
88
92
90
L
R
L'
R'

FIG. 8

FIG. 9

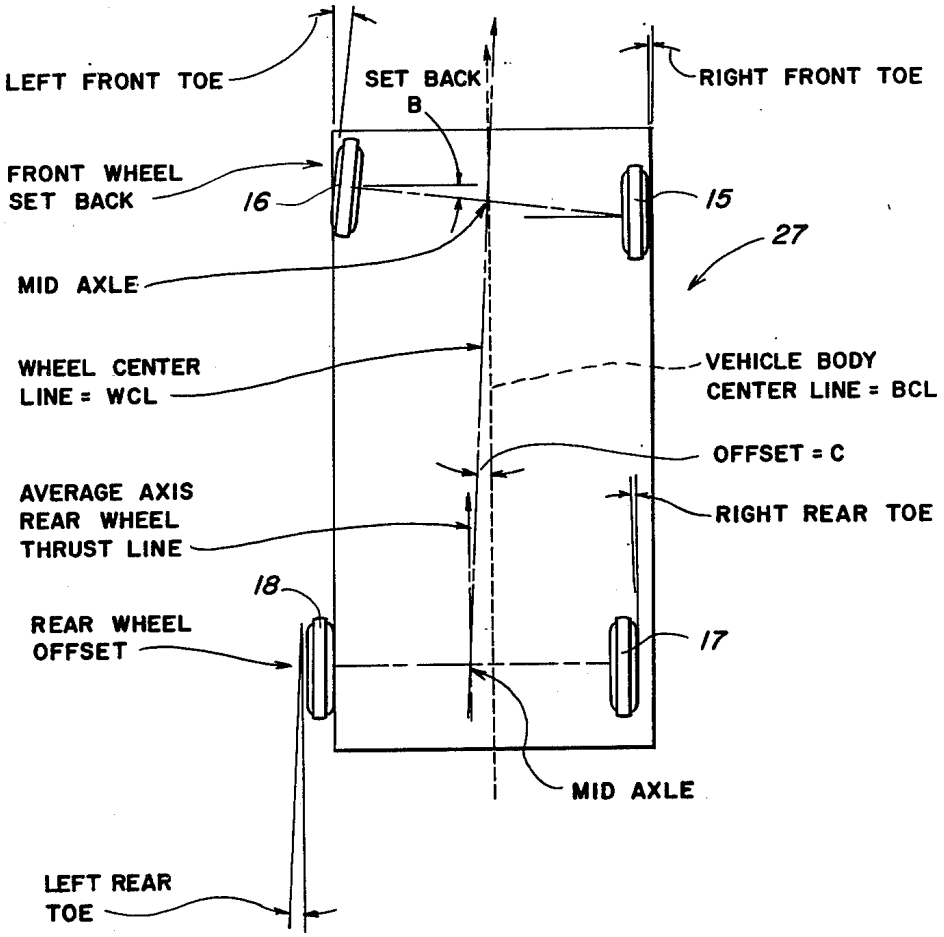

REAR WHEELS HAVE
GREATER TREAD WIDTH.
TREAD WIDTH DIFFERENCE = A

VEHICLE BODY HAS
WIDTH DIFFERENT FROM
TREAD WIDTH = D

VEHICLE WHEEL AND BODY ALIGNMENT DIAGNOSING SYSTEM

BACKGROUND OF THE INVENTION

The ideal geometric configuration of a four wheel vehicle is a rectangle in which: the steerable wheels will run parallel with each other and are equidistant from the center of the connecting axle or its equivalent; in which the nonsteerable wheels will run parallel with each other and are equidistant from the center of the connecting axle or its equivalent; in which the non-steerable wheels either track with the steerable wheels or are equally off set from the steerable wheel tracks; and in which the vehicle body has its longitudinal geometric center line coincident with the longitudinal center line for the steerable and non-steerable wheels.

The practical and economic considerations involved in the production of wheeled vehicles take into account the complications in connection with manufacturing tolerances present in the various parts and the possibility that tolerance mis-matching can build up variations from the ideal geometric configuration. As a consequence of the possible mis-matching of tolerances in the parts making up a finished vehicle provision is made for mechanically adjusting wheel positions relative to the chassis or body of a vehicle. In some vehicles all adjustments are found in the steerable wheel assemblies, while in others the adjustments are provided in both the steerable and non-steerable wheel assemblies. Generally vehicles are permitted to have some deviations from the ideal conditions of wheel alignment and wheel to body alignment. As long as the deviations are not regarded as serious the vehicle is put into use.

In the vast majority of cases vehicles are sold with the alignment characteristics well within specification tolerance, and the alignment provides satisfactory results for the owners. Nevertheless, after a period of use the mechanism mounting the wheels on the chassis or body wear, and the alignment characteristics deviate from normal tolerance. Of course, under such conditions the provisions made for adjusting wheel alignment are used to restore the alignment to the desired conditions. A well treated vehicle can have its alignment diagnosed and adjusted to specifications, but one that has been mistreated or has been involved in a collision is much more difficult to diagnose or correct.

The many conditions attached to the original assembly of vehicles, and the equally many things that can occur to change wheel alignment on vehicles in use, make the design of apparatus to diagnose those conditions and changes very difficult. In the past apparatus has been provided that is capable of limited wheel alignment diagnosing ability. Some apparatus is simple to operate and some is very difficult and complicated, but in either type of apparatus there is little or no provision for obtaining a complete understanding of the interrelations of the steerable to non-steerable wheels, or of the relationship between wheels and vehicle body, or of the part that center point steering wheel position plays in relation to the other characteristics.

Examples of apparatus devised for examining vehicle wheel alignment characteristics include Carrigan U.S. Pat. No. 2,601,262, issued June 24, 1952, which is a light beam projection system incorporating passive light reflective mirrors on the steerable and non-steerable wheels and a chart spaced away from the vehicle to be in alignment with the light beam. Wheel alignment

testing equipment involving placing it against machined surfaces on the wheels is shown in Holub U.S. Pat. No. 2,972,189 issued Feb. 21, 1961. This equipment is directed to the capability of locating and measuring misalignment in the frame and front and rear housings of a vehicle, as well as checking wheel tracking, all with line of sight telescopes and mechanical components. A somewhat similar vehicle wheel alignment device has been disclosed in MacMillan U.S. Pat. No. 3,091,862 issued June 4, 1963, but this is limited to use of sighting tubes and portable targets.

More sophisticated apparatus for indicating wheel alignment characteristics has been shown in Manlove U.S. Pat. No. 3,164,910 issued Jan. 12, 1965 and No. 3,181,248 issued May 4, 1965 respectively. In these arrangements mechanical pointers are caused to move over scales for checking alignment characteristics. The use of light beam projecting means for wheel alignment checking is disclosed by Holub U.S. Pat. No. 3,337,961 issued Aug. 27, 1967. However, the projectors illuminate scales at different times and so avoid simultaneous operation. Another system for using light beams in association with steerable wheels has been disclosed by Senften U.S. Pat. No. 3,782,831 issued Jan. 1, 1974 in apparatus for determining the angular position between a fixed and a movable body, such as the position of the steerable wheels relative to the axle. Electronic scanning devices butted against the vehicle steerable and non-steerable wheels has been disclosed by Hirmann U.S. Pat. No. 3,855,709 issued Dec. 24, 1974 wherein the scanning devices measure chassis geometry from the wheel position.

Alignment equipment limited to front wheel toe is shown in Butler U.S. Pat. No. 3,865,492, issued Feb. 11, 1975. This type of equipment has severe limitation as to what information can be obtained about the alignment characteristics of vehicle wheels and body. The prior art includes the electronic run-out compensation means of Senften U.S. Pat. No. 3,892,042 issued July 1, 1975 which is concerned with getting wheel alignment checking means properly oriented with the plane of wheel rotation. More recently, electronic alignment apparatus for indicating front wheel toe has been disclosed by Rishoud, et al U.S. Pat. No. 3,963,352 issued June 15, 1976, or by Florer, et al in U.S. Pat. No. 4,095,902 issued June 20, 1978, or by Lill in U.S. Pat. No. 4,097,157 issued June 27, 1978.

The most recent apparatus is shown in Hunter patent application, Ser. No. 942,302, filed Sept. 14, 1978, wherein apparatus is provided which has the ability to diagnose alignment characteristics.

BRIEF DESCRIPTION OF THE INVENTION

This invention is related to the apparatus shown in copending patent application of Hunter, Ser. No. 942,302 filed Sept. 14, 1978 and directed to vehicle wheel alignment apparatus, and is more specifically directed to vehicle wheel and body alignment diagnostic facilities and the circuitry associated therewith in a novel system.

An important object of the present invention is to provide a unique system of instruments for diagnosing vehicle wheel alignment characteristics so that the performance of the vehicle can be checked and improved when found necessary.

Another object of this invention is to provide a system for correlating the functions of different types of

sensors so the planes of wheel rotation individually and in sets may be determined and displayed for analysis and correction.

Yet another object of this invention is to provide a system of instruments capable of measuring alignment characteristics of vehicle wheels in respect of the effect they may have on the motion of the vehicle and the alignment attitude of the vehicle body relative to the direction of motion, as well as showing a need for modifications in the position of the wheels.

Other objects of the present invention are to provide a system for determining the alignment characteristics of vehicle wheels using an organization of active and passive sensors related to the wheels, to provide a system for finding the alignment characteristics of steerable as well as non-steerable wheels, and to provide a system for accomplishing the foregoing so that vehicle motion can be improved.

Further objects of the present invention are to simplify the construction of the essential apparatus, to increase the accuracy of results in the use of the apparatus, to devise apparatus that may be used with a variety of wheel mounting arrangements, and to be able to check out the critical wheel alignment parameters quickly, accurately and with instruments having unique characteristics.

BRIEF DESCRIPTION OF THE DRAWINGS

The various components making up the apparatus of the present invention have been disclosed in the accompanying drawings, wherein:

FIG. **1** is a general plan view of the wheel layout of a vehicle and an outline of the body therefor, together with the major components of apparatus for diagnosing alignment characteristics of the steerable and non-steerable wheel sets and wheel to body relationship;

FIG. **2** is an elevational view of a typical sensor unit carried on a steerable wheel, the view being taken along line **2—2** in FIG. **1**;

FIG. **3** is a transverse view of the sensor unit of FIG. **2** as seen along line **3—3**;

FIG. **4** is an elevational view of a typical thrust line unit carried on a non-steerable wheel, the view been taken along line **4—4** in FIG. **1** with portions shown in section;

FIG. **5** is a view of the typical thrust line unit of FIG. **4** as seen along line **5—5** with the retro-reflector and its support moved into position to uncover a reflector mirror;

FIG. **6** is a perspective view of the retro-reflector removed from the thrust line unit and attached to a magnetic support for mounting on the vehicle body;

FIG. **7** is a block diagram of the circuit arrangement for displaying the various alignment characteristics developed in and by the present embodiment;

FIG. **8** is a more detailed block diagram of the circuits components embodied in FIG. **7**; and

FIG. **9** is a diagrammatic plan view showing a vehicle body and wheel arrangement representative of an alignment condition which the present invention is capable of diagnosing.

DETAILED DESCRIPTION OF THE INVENTION MECHANICAL APPARATUS

A presently preferred vehicle wheel alignment diagnosing apparatus is seen in FIG. **1** in association with a vehicle having a right steerable front wheel **15**, a left steerable front wheel **16**, a right non-steerable rear wheel **17**, and a left non-steerable rear wheel **18**. The instrumentation for the present apparatus includes a sensor unit **19** carried on a support arm **20** which is part of a mounting device **21** attached to the wheel **15**, and a similar sensor unit **22** carried on a support arm **23** which is part of a mounting device **24** attached to the wheel **16**. Each device **21** and **24** embodies run-out compensation means of a type disclosed in Senften U.S. Pat. No. 3,891,042 granted July 1, 1975. The purpose of the run-out compensation means is to position the sensor units **19** and **22** in a predetermined relationship with the plane of rotation of the front wheels **15** and **16** respectively. Furthermore, each sensor unit embodies a photosensor in position to be energized when scanned by a light beam. The photosensor will be described presently.

The sensor units **19** and **22** have certain photosensors activated by the transversely directed beams coming from the opposite beam, and other photosensors activated in a predetermined manner by passive alignment means carried by thrust line units mounted on the rear or non-steerable wheels. These passive means and thrust line units are seen in FIG. **1** at **25** on the right rear wheel **17** and at **26** on the left rear wheel **18**. The thrust line units **25** and **26** are identical except for being made in right hand and left hand form, each includes a flat mirror and a retro-reflector for returning light beams projected longitudinally of the vehicle, represented by the body outline **27**, and returned to the sensor units **19** and **22** on the front wheels being tracked or followed by the rear wheels. Each thrust line unit **25** and **26** is constructed so the center area of the mirror, as well as the position of the retro-reflector, is substantially the same distance out from the plane of rotation of the wheel on which they are supported.

The sensor units **19** and **22** project light beams transversely of the vehicle body **27** toward the opposite sensor unit as well as toward passive reflectors at the rear wheels. Signals generated at the photosensors in the sensor units **19** and **22** are individually transmitted by bundle wire leads **28** and **29** to a console **30** where they are processed and displayed. The console **30** may be stationary or it may be mobile so that the signal display can be better seen while adjustments are being performed on the vehicle wheels. The details of the sensor unit **19** carried by the steerable right front wheel **15** will also apply to the sensor unit **22** on the steerable left front wheel **16**.

FIGS. **2** and **3** show the typical sensor assembled in a suitable housing **31** which is made up of two parts engaged at a slip joint **32**. The unit includes a fixed bracket **33** attached to a plate **34**. A cast body **35** is pivoted on the bracket **33** at pivot element **36** so the body can swing back and forth in a horizontal plane. The body **35** carries a light beam projector **37** and a second projector **38** at substantially 90° to the first projector so that a single source of light **39** will be projected at the same time by each projector **37** and **38**. A motor **40** drives a cam **41** mounted on shaft **42**, and the body **35** is provided with a cam follower **43** which is held on the cam surface by a spring **44**. The cam **41** is contoured to effect oscillations or sweeps of the light beam projectors **37** and **38** in one direction through an angle of about 240° of cam rotation, and through the remaining angle of about 120° of cam rotation to the starting position. The sweep angle is selected to cause the longitudinally directed light beams from projectors **38** to scan the position of the passive reflective means so the reflected light beam path returned from the thrust line units **25** and **26**

will activate photosensors **38A**. Potentiometer means **45** rotates with the cam **41** and generates signals which are the analogs of the angle of the returning light beam directed from the passive reflector means and the angle of the transverse light beam upon reaching the opposite photosensors **37A**. The speed of rotation in the sweep angle of 240° of cam rotation will be about one-half the return speed through the sweep angle of 120°. The sensor unit **19** is mounted in operative position on the arm **20**, and the circuits from the potentiometer means **45**, and for the common source of light **39** pass through arm **20** and emerge in lead **29**. The make-up of sensor unit **22** is the same, and the circuits are embodied in lead **28**. The construction of the respective sensor units **19** and **22** is best set forth in pending application of David A. Senften, Ser. No. 798,780, filed May 20, 1977, now U.S. Pat. No. 4,126,943 issued Nov. 28, 1978.

In FIGS. **4** and **5** there is seen a thrust line unit which is typical of the units **25** and **26**, the one being shown is mounted on the right rear non-steerable wheel. This unit has a frame **50** providing a housing **51** for supporting the clamping means **52** which holds the assembly in pendent position from the wheel mounting adapter **53** of a type seen in Lee Hunter pending application, Ser. No. 881,722 filed Feb. 27, 1978, now U.S. Pat. No. 4,167,819 dated Sept. 18, 1979. The adapter comprises a lower bracket **54** carried on a pair of rods (one being shown) **55** so its wheel rim contact pin **56** is projected toward the wheel rim. The rods **55** also carry a slidable and adjustable bracket **57** opposite the bracket **54** in position to present a wheel rim contact pin **58** which cooperates with the first mentioned pin **56**. The bracket **57** is displaced and locked on rods **55** by manipulating the key **59** to drive the pins **56** and **58** into the wheel rim. A centrally disposed bracket **60** is slidable along the rods **55** so the axis of the draw rod **52A** may be brought into close alignment with the axis of rotation of the wheel. A plurality of run-out compensating elements (one of three being shown) **62** and cooperating spring guides **63** are provided on a disc **64** to function in connection with adjusting the axis of the draw rod **52A** so it is parallel to the axis of wheel rotation. This run-out compensation provision makes it possible to place a wheel camber sensing assembly **65** in proper position to determine camber by rotating the dial **66** to center a bubble device **65B**. The pendent position of frame **50** is determined by bubble device **65A**. This places the mirror in proper vertical position. Also the dial **66** will show the amount of positive, negative, or zero camber present in the wheel.

The unit is equipped with a depending frame **68** held by threaded means **69** so a flat mirror **70** carried in the frame can be positioned to be substantially perpendicular to the plane of rotation of the non-steerable wheel on which it is carried. The assembly includes a pair of friction controlled hinges **71** which support a plate **72** movable (FIG. **5**) between raised full line position to expose the mirror **70** and lowered broken line position to obscure the mirror. The plate **72** carries at a central location a retro-reflector device **73** which may be dismounted, when necessary, by pulling its stem **73A** out of a socket **74** which normally frictionally retains the stem **73A** so the retro-reflector will not fall off the plate **72**.

However, in certain phases of the operation of the present apparatus it is necessary to dismount the retro-reflector from the units at each rear or non-steerable wheel **17** and **18**, and attach them to the adjacent surface of the body **27**. The attachment means **75** is seen in FIG. **6** where the plates **75A** embrace a horse shoe type or other magnetic element **76** with its polepieces exposed so they can engage the vehicle body metal adjacent the rear wheels. The plates **75** also embrace a socket (not shown) which is the same as the socket **74** on the plate **72** (FIG. **5**) so the retro-reflector **73** may be snapped into place in the attachment means **75**. In vehicles provided with non-metallic fenders, it is necessary to first apply a clip or suitable attaching means so the means **75** will be held in place. It is understood that the flat mirror **70** at each rear non-steerable wheel **17** and **18** is disposed to be in the line of the light beam projected longitudinally from the respective sensor units **19** and **22**. When the plates **72** are in the down position to cover the mirrors the retro-reflective devices are located to be within the central area of the mirrors for reflecting the light beams. The positioning of the retro-reflective devices **75** on the vehicle body must be such that the projected light beam will be picked up and reflected, and when this use of the retro-reflective devices is necessary the plates **72** are in position to cover or obscure the mirrors **70**.

While the preferred embodiments of apparatus are those above set forth, it is within the scope of this disclosure to use any suitable form of light energized device which performs the function of photosensors **37A** and **38A**. Since light from the projectors **37** and **38** is a form of radiant energy, it is contemplated that the devices **37A** and **38A** can be selected to be compatible with the radiant energy projected by projectors **37** and **38**. It is also within the scope of this disclosure to provide any suitable support means for attaching the retro **73** to the vehicle body, even though there has been disclosed a magnetic device as one means of support for the retro-reflectors **73**. In attaching the retro-reflectors **73** to the vehicle body **27** care must be exercised to have these devices at substantially the same distance out from the body adjacent the rear wheels to achieve close symmetry of location to the body center line, axis, just as the units **25** and **26** achieve substantially the same character of symmetry.

When the outside electrical power is turned on at the console **30** current is supplied through suitable connections (not necessary to show) to the motors **40** at each sensor unit **19** and **22** so the cams **41** oscillate the projectors **37** and **38**, and the light source **39** common to both projectors is energized. The transverse light beams from projectors **37** (the sensors **19** and **22** are made in right hand and left hand parts) will begin sweeping through angles which scan the positions of the opposite light energized photosensor devices **37A** and signals will be generated which are the analog of the angle of the steerable wheel planes of rotation relative to the transverse light beam relative to the axle common to these wheels. Simultaneously the projectors **38** will throw longitudinally directed beams of light toward the rear or non-steerable wheels **17** and **18** seeking the selected one of the passive reflective mirrors **70** or the passive retro-reflective devices **73**. The returning light beams will strike the light energized devices **38A** and produce signals which are informative of the relation of the wheels to certain characteristics of the vehicle, as follows:

When the retro-reflectors **73** are in position on the wheels to be in the longitudinally directed light beam scan the signals from devices **38A** are analogs of the left and right front wheel toe with respect to the wheel

center line. If the retro-reflectors **73** are positioned on the vehicle body **27** adjacent the rear wheels in the longitudinally directed light beam scan the signals from the devices **38A** are analogs of the left and right front wheel toe with respect to the vehicle body center line. However, when the flat mirrors **70** are in the path of the longitudinally directed light beam scan the signals from devices **38A** are analogs of the left and right front wheel toe with respect to the thrust line developed by the rear wheels. Out of these several relationships, it is a unique aspect of this invention to be able to combine sensor signals to measure and display specific alignment parameters using a common geometric reference (see FIG. **9**), such as the vehicle body center line which will be identified as BCL. In certain cases the common reference will be the wheel center line identified as WCL. Front wheel set back is the angle B formed between the perpendicular to the body center line BCL and the average axes connecting the front wheels **15** and **16**. If the body center line BCL and the wheel center line WCL do not coincide, the angular deviation is identified as C. The presence of a different tread width angle is identified as A, whereas a difference in body width to tread width angle is identified as D. Another important parameter is the angle θ (Theta) formed between either front wheel sensor mount and the path of the reflected light beam from the rear wheel (at the same side) relative to the vehicle body center line BCL.

From the foregoing identified parameters the following relationships will result:

Signal L=LFT (left front toe relative to BCL)+B

Signal L'=LFT+θ

However, the values of L' will vary depending on the passive reflector being used, such as:

Signal L'm designates the use of the mirror **70**

Signal L'r designates use of the retro **73** on the wheel

Signal L'b designates use of the retro **73** on body **27**.

Also, the value of θ will vary depending on the passive reflector being used, such as:

For signal L'm θ is equal to LRT (left rear toe)

For signal L'r θ is equal to A+C

For signal L'b θ is equal to D

Thus the longitudinal sensor signals from the left front wheel sensor device **38A** are voltages analogous to the geometry shown in FIG. **9**, as follows:

Signal L'm=LFT−LRT (left rear toe)

Signal L'r=LFT−A+C

Signal L'b=LFT−D

Similarly, sensor signals from the right front wheel sensor device **38A** are voltages analogous to the geometry shown in FIG. **9**, as follows:

Signal R=RFT (right front toe)−B

Signal R'm=RFT−RRT (right rear toe)

Signal R'r=RFT−A−C

Signal R'b=RFT−D

ELECTRONIC APPARATUS

FIG. **7** illustrates the general circuit arrangement housed in the console **30** for translating the functions of the front wheel mounted sensors **19** and **22** and the rear wheel mounted thrust line units **25** and **26** into usable information about the alignment conditions of a vehicle. When armed with such information a number of corrections can be made to accommodate, reduce, or eliminate faults, such as front wheel set back or rear wheel off-set, or possibly to correct divergence of body center line to wheel center line. In FIG. **7**, a signal from the left wheel sensor **22** generated by device **37A** is related to the angle of the transverse light beam to the plane of whee. rotation, and the same relationship for the opposite or right wheel sensor **19** is embodied in the signal from its device **37A**. In like manner, the devices **38A** in each of the front wheel sensors **19** and **22** generate signals representing the relation of the longitudinal light beams to the specific passive reflector means **70** or **73** being employed.

The respective signals from the photosensor device **37A** for the right front wheel mounted sensor **19** and the signal from the photosensor **38A** for the left front wheel mounted sensor **22**, together with the ramp voltage generated by the potentiometer means **45** in the sensor **22** are fed into computer **80**. The computer **80** develops a signal in lead **84** which represents left front wheel toe relative to body center line, plus a factor B if set-back is present, discovered by information from the longitudinal signals. The computer **80** also develops a signal in lead **85** which represents information about the relationship of front to rear or longitudinal parameters, depending on the passive reflector being used. This signal may be dependent upon use of the mirror **70**, or the retro-reflector **73** on either the rear wheel or the vehicle body.

In like manner the respective signals from the photosensor device **37A** for the left front wheel mounted sensor **22** and the signal from the photosensor **38A** for the right front wheel mounted sensor **19**, together with the ramp voltage generated by the potentiometer means **45** in the sensor **19** are fed to computer **81**. The computer **81** develops a signal in lead **86** which represents right front wheel toe relative to the body center line, minus a factor B if set-back is present, as discovered by information from the longitudinal signals. Also, the computer **81** develops another signal in lead **87** which represents longitudinal alignment information, depending upon the use of the mirror **70** or the retro-reflector **73** on the wheel or on the body.

The respective signals developed in the computers **80** and **81** are fed into a composite computer **82** and are processed in predetermined ways, depending upon the information received, to develop desired alignment information. In general, computer **82** has an output **101A** for left front toe corrected for run-out in compensator **48** and the corrected output **48A** is fed into a signal selector circuit **116** from which desired information can be extracted, as well as being fed back to the computer **82** in lead **48B**. In like manner the output **102A** for right front toe is fed into run-out compensator **49**, and the compensated signal is fed by line **49A** into signal selector circuit **116** and by line **49B** back to the computer **82**. Certain signals are stored in a separate memory **83** and are fed through computer **82** to outputs **89A** and **95A** to the circuit **116**. As can be appreciated by comparing FIGS. **7** and **8**, front total toe signal **103A**, front thrust line signal **104A**, left rear toe signal **111A** right rear toe signal **113A** are each fed into circuit **116**. Finally the rear thrust line signal **114A** is fed into circuit **116** so that the desired information is made useable for display (FIG. **7**) or recording. Generally the signal selector circuit **116** is connected to displays **117**, **118**, **119**, **120** **121**, **122** and **123** to be described presently, and these are supplied through connection **124**. However, the desired type of information to be displayed or stored or recorded is processed in appropriate circuit block **126** controlled through a signal output controller **125** connected into the circuit **116** and the circuits **126**.

The circuits of computer **82** are shown in the block diagram of FIG. **8**, and attention will be directed to that diagram. The signals fed into this computer are described in relation to the view of FIG. **7** and comprise left front sensor signal leads **84** and **85**, and right front sensor signal leads **86** and **87**. These leads correspond to the previously described leads carrying sensor signals generally denominated L, R, L' and R' respectively. It is of course understood now that the characteristics of the source of signals in leads **85** and **87** depend upon the selection and location of the passive reflector means **70** and **73**. In a general way the diagram of FIG. **8** comprises a circuit **91** within the computer **82** for set-back and off-set computation in which signals from leads **84**, **85**, **86** and **87** are summed in relation to the positive and negative polarity indicated, and multiplied by one-half. The results of the computation in circuit **91** is fed into memory **83** by lead **88**. The lead **88** is connected to a two position switch **92** which enters set-back information within the memory circuit **83**. The switch **92** is normally in a circuit make position through connection **90** into a sub-circuit **94** for computing the off-set information and inserting it in the memory sub-circuit **95**. When switch **92** is moved to its second position a lead **96** feeds information into a set back memory sub-circuit **97**. When the memory sub-circuits **95** and **97** are to be cleared normally open switch **83A** is closed.

The circuits in computer **91** control the character of information to be stored in the memory circuits **83**, since the utilization of memory in the case of off-set and set-back parameters is to facilitate subsequent use of such measurements to refine what would be otherwise ambiguous information. The information must be stored in the memory **83** because it is derived in one method of using units **25** and **26**, but must later be algebraically mixed when the units **25** and **26** are being used in different modes. For example, the information in lead **88** is set-back when the signals in leads **85** and **87** are developed from the retro-reflectors **73** on the vehicle body **27**. Switch **92** is manipulated to feed that information into the set-back memory **97**. When the signals in leads **85** and **87** are derived from retro-reflectors on the wheels **17** and **18** then the information in lead **88** is off-set minus set-back. Since the input signal to the off-set computer **94** is signals C less B, the addition of the output from the set-back memory **97** causes the off-set computer to develop only off-set information for subsequent use on other computations as well as for display of the geometric conditions of the vehicle.

More specifically, computer **91** performs in the following manner, using signals from leads **84**, **85**, **86** and **87**, and the computation is as follows for set-back and for off-set. The general computation is based on the signal in lead **88** being expressed by the formula $\frac{1}{2}(L'-L-R'+R)$. From the parameters previously established with the retro-reflectors **73** on the vehicle body **27** it follows that

$$\begin{aligned}\text{Signal 88} &= \tfrac{1}{2}(L_b' - L - R_b' + R) \qquad \text{Eq. 1:}\\ &= \tfrac{1}{2}[(LFT - D) - (LFT + B) - (RFT - D) + (RFT - B)]\\ &= \tfrac{1}{2}(-2B) = -B \text{ (where } B \text{ is set-back)}\end{aligned}$$

Thus the value of set-back from equation 1 is entered into the set-back memory circuit **97** by pressing switch **92** to connect leads **88** and **96**.

Using the general computation formula, but now substituting for the retros **73** mounted on the devices **25** and **26**, it follows that

$$\begin{aligned}\text{Signal 88} &= \tfrac{1}{2}(L_f' - L - R_f' + R) \qquad \text{Eq. 2:}\\ &= \tfrac{1}{2}[(LFT - A + C) - (LFT + B) - (RFT - A - C) - (RFT - B)]\\ &= \tfrac{1}{2}(2C - 2B) = C - B \text{ (off-set less set-back)}\end{aligned}$$

The signal of off-set less set-back is normally connected through switch **92** to the off-set computer **94** by lead **90**. The set-back previously stored in memory **97** alone is fed by lead **98** to the computer **94** and summed with off-set less set-back to produce off-set alone in memory **95**.

It is desired to perform the set-back and off-set steps early in the diagnosis procedure for use in following steps when the reflective mirrors **70** are used. Thus, in addition to obtaining off-set and set-back as useful alignment knowledge, these are required to properly compute individual rear wheel toe angles and rear wheel thrust line.

Circuit system of FIG. **8** includes circuits in block **100** for examining front wheel toe and front thrust line or direction. Circuit **100** includes a left toe sub-circuit amplifier **101**, right toe sub-circuit amplifier **102**, total front toe sub-circuit amplifier **103**, and front thrust line sub-circuit amplifier **104**. The informative signals from leads **84**, **85**, **86** and **87** are connected to the sub-circuit amplifiers **101** and **102** in the indicated polarity and scaled with the indicated multiplier. The results are that sub-circuit amplifier **101** generates left front wheel toe and sub-circuit amplifier **102** generates right front wheel toe. The results generated in sub-circuit **101** are connected through compensation circuit **48** and shown at the left toe display **117**. The results generated in sub-circuit **102** are connected through a compensation circuit **49** and shown at the right display **118**. When these results are added in sub-circuit **103** the total front wheel toe is generated and shown at display **119**. In the circuit **100** when the retro-reflectors **73** are on the wheel mounted units **25** and **26**, the signals in leads **85** and **87** are related to the wheel center line WCL, but when the retro-reflectors **73** are placed on the vehicle body **27** (by means seen in FIG. **6**) the signals in leads **85** and **87** are related to the body center line (BCL). Circuit **100** also includes a sub-circuit amplifier **104** which is connected to the leads **48B** and **49B** to generate information about the front wheel thrust line in relation to the source of the information derived from the passive reflector means **70** and **73** and which ones thereof are selected at which positions. When selected by the controller **125**, the front thrust line information is put into the circuit **116** and may be shown at display **123**.

Still referring to FIG. **8**, the circuit system **82** includes circuits in block **110** for examining rear wheel toe, thrust line and tread width difference. The sub-circuit amplifier **111** develops left rear wheel toe through signals from leads **84** and **85** in the indicated polarity and scaled with the indicated multiplier. This information is modified or refined by signals from memory **83** by leads **89** and **90A**, said signals being scaled in the indicated polarity.

More specifically circuit **111** receives signal L from lead **84**, signal L'_m from lead **85**, and set-back B from lead **89**, as follows:

$$\text{Circuit 111} = L - L_m' - B$$

-continued

$$= LFT + B - (LFT - LRT) - B$$
$$= LRT \text{ (relative to } BCL)$$

Similarly:

Circuit 112 $= R - R_m' + B$
$$= RFT - B - (RFT - RRT) + B$$
$$= RRT \text{ (relative to } BCL)$$

When switch **115** is operated to the position WCL the result is that off-set is applied to add to the left rear toe and to subtract from the right rear toe. This step rotates these measurements to be with respect to wheel center line (WCL) rather than to body center line (BCL).

It can now be appreciated from the foregoing that when the retro-reflectors **73** are on the vehicle body, rear wheel toe is related to the body center line BCL. However, when the retro-reflectors **73** are on the wheels **17** and **18** the wheel toe is related to the wheel center line WCL. Thus the rear wheel toe values are corrected by the off-set influences through manipulation of selector switch **115** for introducing the off-set refinement from the off-set circuit **95** in the memory **83**. The introduction of these factors is handled with the indicated polarity. In the case of the right rear wheel toe computation in sub-circuit amplifier **112**, the signals from the leads **86** and **87** are introduced with the indicated polarity and the multiplier factor, subject to refinement of off-set signals from circuit **95** in memory **83** and in the indicated polarity through leads **89** and **90A**.

Still referring to the circuit **110**, the total rear wheel toe is computed in sub-circuit amplifier **113** through the complement of signals when using mirrors **70** from leads **84**, **85**, **86** and **87** scaled by the indicated polarity and multiplied by the indicated factor. Tread width differences between the rear wheels and front wheels is also computed in this same sub-circuit **113**, this factor being dependent upon the retro-reflectors being on the rear wheel units **25** and **26**. The tread width can be displayed through lead **113A** connected to circuit **116** and called out by selector **125** at display **123**. In order to find the rear thrust line, the signals from the left rear toe amplifier **111** and right rear toe amplifier are fed into a sub-circuit **114** along with signals from memory **83**, all of which are processed through the indicated polarity and multiplied by the indicated factor of one-half. This result is picked up in circuit **116** through lead **114A** and may be shown on display **123** when so selected.

Set-back and off-set information stored in memory **83** may be displayed in the following manner. It is understood that the amplifier **91** processes the signals from leads **84**, **85**, **86** and **87** in the indicated polarity and with the indicated scale. The switch **92** is normally closed making a circuit to the off-set computer **94**, but when actuated the circuit is made through lead **96** to the set-back amplifier **97**. When the retro-reflectors **73** are placed on the vehicle body, as previously described in connection with FIG. **6**, amplifier **97** produces signals analogous to set-back only. Amplifier **97** provides a signal in line **89** which can be passed through circuit **116** to the display **123** by moving the selector **125** to position **3** (FIG. **1**). The set-back amplifier provides an input to the off-set computer amplifier **94** through line **98** so that the amplifier **94** can develop an output of off-set only in line **93** which supplies this information to off-set memory amplifier **95**. The off-set information can be selected for display **123** by selecting position **4** at selector **125**.

In view of the above it should be clear that rear wheel alignment information developed in circuits **111**, **112** and **113** pass through leads **111A**, **112A** and **113A** to the circuit **116** (FIG. **7**) and may be presented on displays **120**, **121** and **122** which relate respectively to left rear toe, right rear toe and total rear toe, by moving selector **125** to position **2**.

SUMMARY

It should now be appreciated from the foregoing description that the present vehicle wheel and body alignment diagnosing system embodies novel features for finding a number of vehicle wheel and wheel to body alignment characteristics not heretofore possible in the operation of current alignment equipment. In its broadest aspects the invention embodies a method which includes mounting light beam projecting means on each of a first set of wheels in position so that the projected light beams are directed simultaneously in directions substantially normal and parallel to the planes of rotation of the first set of wheels, disposing first light beam reflecting means on each of a second set of wheels so as to be in position in which the reflective surface is substantially normal to the plane of rotation of the second set of wheels, providing second light beam reflecting means capable of being carried selectively of each of the second set of wheels and by the vehicle body adjacent those wheels, disposing light beam sensor means in paths to intercept the reflected light beams and to be thereby energized for generating signals representative of the desired alignment characteristics, and processing the generated signals to compute and separate out the respective alignment characteristics of the first and second sets of wheels, whereby such characteristic as set-back, off-set, wheel toe and wheel thrust line relationships can be made known.

While there has been shown in the drawings and described a preferred embodiment for the practice of this invention, it is to be understood that unnecessary limitations are not to be imposed on that apparatus for diagnosing vehicle wheel and body alignment relationships. In its broad aspects the invention resides in utilizing, with active sensor means mounted on a certain set of wheels, cooperative passive sensor means which have a definite relationship with the vehicle body on another set of wheels, whereby the alignment characteristics of the respective sets of wheels may be discovered and used to check the overall alignment, or used to monitor the wheel positions during alignment correction. While the foregoing description has been given with the sensors **19** and **22** located on the front or steerable wheels of the vehicle, it is to be understood that these sensors can be placed on the non-steerable wheels **17** and **18**, while the passive reflector units **25** and **26** may be located on the front steerable wheels **15** and **16**. It is not required that the sensors **19** and **22** and the passive means **25** and **26** need to be interchanged end for end of the vehicle. In using the present items of apparatus all essential alignment characteristics may be discovered without such interchange.

What is claimed is:

1. Apparatus for use in finding the alignment characteristics of first and second sets of vehicle wheels relative to each other and with respect to the vehicle body, said apparatus comprising: alignment scanning means carried by each wheel of a first set for projecting a beam of radiant energy transversely and longitudinally of the vehicle body; radiant energy reflecting means selectively carried by each of a second set of wheels and the adjacent vehicle body in position for reflecting the radi-

ant energy beams projected longitudinally from said scanning means; first signal generating means carried by each of said scanning means positioned to be energized by the transversely projected radiant energy beam; second signal generating means carried by each of said scanning means positioned to be energized by the longitudinally projected radiant energy beam; and signal receiving and computing means connected to said first and second signal generating means carried by each of said scanning means for calculating wheel and body alignment characteristics.

2. The apparatus set forth in claim 1 wherein, said signal receiving and computing means includes individual circuits for calculating alignment characteristics for said first set of wheels.

3. The apparatus set forth in claim 1 wherein, said signal receiving and computing means includes circuits for calculating alignment characteristics for said second set of wheels.

4. The apparatus set forth in claim 1 wherein, said signal receiving and calculating means includes a memory circuit for storing wheel off-set and set-back alignment information.

5. The apparatus set forth in claim 1 wherein, said signal receiving and computing means includes a calculating circuit for set-back and off-set alignment characteristics in said first and second set of wheels, a first sub-circuit connected to said calculating circuit for memorizing off-set alignment, a second sub-circuit for memorizing set-back alignment connected to said first sub-circuit, and a switch operable to connect said second sub-circuit with said calculating circuit.

6. The apparatus set forth in claim 1 wherein, said signal receiving and calculating means includes a circuit block for finding wheel toe and thrust line of said first set of wheels.

7. The apparatus set forth in claim 1 wherein, said signal receiving and calculating means includes a circuit block for finding wheel toe, thrust line and tread width difference of said second set of wheels.

8. The apparatus set forth in claim 1 wherein, said signal providing and calculating means includes a first circuit block for finding alignment characteristics of said first set of wheels, a second circuit block for finding alignment characteristics of said second set of wheels, other circuit means selectively connected into said second circuit block and to said first and second signal generating means for discriminating between signals from said signal generating means with said radiant energy reflecting means selectively on said second set of wheels and on the adjacent vehicle body.

9. The apparatus set forth in claim 1 and including display means, and selector means connected to said display means and to said signal receiving and calculating means for selecting signals representing wheel alignment characteristics related to the selected positions of said radiant energy reflective means.

10. Apparatus for use in finding alignment characteristics of first and second sets of wheels on a vehicle body and the relationship of the wheel alignment to each other and to the vehicle body, said first and second set of wheels being generally in following relationship, said apparatus comprising: radiant energy projecting means carried by each wheel of said first set thereof in position to direct the radiant energy transversely of said first set of wheels for scanning transversely of said vehicle in relation to the relative alignment characteristics of said first set of wheels; said radiant energy projecting means carried by each wheel of said first set being in position also to project radiant energy toward said second set of wheels for scanning longitudinally of said vehicle in relation to the position of said second set of wheels; radiant energy sensing means adjacent said radiant energy projecting means in positions to respond to transversely and longitudinally projected radiant energy; radiant energy reflective means adaptable for carriage selectively by said second set of wheels and by said vehicle body adjacent said second set of wheels, said reflective means being in position for reflecting the longitudinally projected radiant energy such that it cooperates with said radiant energy sensing means in finding alignment characteristics of said first set of wheels relative to said second set of wheels and alignment characteristics of said second set of wheels relative to the vehicle body; signal generating means carried by each of said first set of wheels in position to be responsive to said radiant energy sensing means for generating first signals resulting from scanning the transversely projected radiant energy and for generating second signals resulting from scanning the longitudinally projected and reflected radiant energy; signal computation circuit means connected to said signal generating means and operable to discriminate between said first and second signals for calculating wheel and body alignment characteristics from said signals; and means connected to said computation circuit means and selectively operable for displaying the results of the computation.

11. Apparatus for finding alignment characteristics of spaced pairs of vehicle wheels disposed on opposite sides of a wheel center line and the alignment thereof relative to the center line of the vehicle body, said apparatus comprising: first alignment sensors carried in predetermined relations on each of a first pair of the vehicle wheels; radiant energy projecting means for each of said first sensors projecting radiant energy beams both transversely of the wheel center line and longitudinally toward the wheels of the second pair of vehicle wheels; first radiant energy reflecting means in predetermined relations on each of the second pair of vehicle wheels; second radiant energy reflecting means selectively carried on each of the second pair of vehicle wheels and by the vehicle body adjacent said second pair of vehicle wheels; first signal generating means carried by said first sensors in position to be energized by radiant energy projected transversely of the wheel center line; second signal generating means carried by said first sensors in position to be energized by radiant energy reflected from said first and second reflecting means and projected longitudinally toward said second pair of vehicle wheels; and computer means connected to said first and second signal generating means and selectively operable with said second radiant energy reflecting means for finding toe alignment of said first pair of wheels with respect to body center line, and with said first radiant energy reflecting means for finding toe alignment of said first pair of wheels with respect to the thrust line of said second pair of wheels.

12. A method for finding vehicle wheel and wheel to body alignment characteristics comprising: mounting radiant energy beam projecting means on each of a first set of wheels in position so that projected radiant energy beams are directed simultaneously substantially normal and parallel to the plane of wheel rotation; disposing first radiant energy beam reflecting means on each of a second set of wheels in position to have a

reflective surface substantially normal to the plane of wheel rotation, providing second radiant energy beam reflective means for carriage selectively by each of said second set of wheel and by the vehicle body adjacent said second set of wheels; locating radiant energy beam sensor means in the paths of the reflected beams to intercept and be energized by the simultaneously projected beams for generating signals representative of wheel and wheel to body alignment; and processing said generated signals to compute the respective alignment characteristics of said first and second sets of wheels in terms of set-back, off-set, toe and thrust line relationships.

13. The method of claim **12** wherein, processing said generated signals includes the steps of computing for wheel set-back.

14. The method of claim **12** wherein, processing said generated signals includes the steps of computing for wheel off-set.

15. The method of claim **12** wherein, processing said generated signals includes the steps of computing for toe of one of said sets of wheels with respect to wheel center line.

16. The method of claim **12** wherein, processing said generated signals includes the steps of computing for toe of one of said sets of wheels with respect to body center line.

17. The method of claim **12** wherein, processing said generated signals includes the steps of storing the computed wheel off-set and set-back alignment characteristics.

18. The method of claim **12** wherein, processing said generated signals includes the steps of computing for thrust line alignment of said sets of wheels.

19. A method for finding vehicle wheel alignment characteristics comprising: locating radiant energy projecting means in predetermined positions on a first set of wheels and projecting radiant energy beams transversely between the first set of wheels and longitudinally from the first set of wheels toward a longitudinally spaced second set of wheels; sensing at each wheel of the first set the radiant energy beams projected transversely therebetween; locating first reflective means in predetermined positions on the second set of wheels and second reflective means selectively over said first reflective means and on the vehicle adjacent said second set of wheels for intercepting the longitudinally projected radiant energy beams; sweeping the transversely and longitudinally projected radiant energy beams for scanning the sensing means at each wheel of the first set and for scanning the location of the first and second reflective means; reflecting back selectively toward the first set of wheels the intercepted longitudinally projected radiant energy beams reaching the location of the first and second reflective means; using the sensed transversely projected radiant energy beams to generate signals representative of first alignment characteristics of the first set of wheels; using the longitudinally projected radiant energy beams when reflected back from the area adjacent the second set of wheels to generate signals representative of the alignment characteristics of the first and second set of wheels; and combining the respective signals generated as a result of the radiant energy beam directioning in an alignment calculating computer for revealing the alignment characteristics.

20. A method of finding vehicle wheel and body alignment characteristics comprising: disposing radiant energy beam projecting means on each of a first set of wheels for directing a first beam transversely of the vehicle and for directing a second beam longitudinally of the vehicle in relation to the plane of wheel rotation; disposing radiant energy beam reflecting means selectively on the wheels of a second set spaced from the first set of wheels and on the vehicle body adjacent the second set of wheels; disposing radiant energy beam sensing means adjacent the radiant energy beam projecting means in positions to receive the radiant energy beams projected both transversely and longitudinally and convert the same into electrical signals representative of wheel to wheel and wheel to body alignment; gathering the electrical signals in a signal processing multicircuit computer for determining the alignment characteristics between the first and second sets of wheels and the relative alignment relationship of the vehicle body to the sets of wheels; and displaying the results of the computer determination.

* * * * *